I-TECH
MEDICAL DIVISION

USER MANUAL

Ultrasound therapy

I-TECH UT1

I.A.C.E.R. Srl
Via S. Pertini 24/A - 30030 Martellago (VE) - Italy
Tel.: (+39) 041/5401356 - Fax: (+39) 041/5402684 - Email: iacer@iacer.it - PEC: iacer@pec.it - Web: www.itechmedicaldivision.com
Vat Number: IT00185480274 - R.E.A.: VE N. 120250 - M. VE001767 - Share Capital: € 110.000,00 i.v.

I-TECH
MEDICAL DIVISION

INDEX

INDEX **III**

TECHNICAL INFORMATION **4**
INFORMATION ON THE USER MANUAL 4
MANUFACTURER 5
DECLARATION OF CONFORMITY 5
CLASSIFICATION 6
PURPOSE AND SCOPE 6
TECHNICAL FEATURES 7
DEVICE AND COMMANDS DESCRIPTION 9
LABELLING 11
Package content *12*

HOW TO USE **13**
CONTRAINDICATIONS 13
Side effects *13*
WARNINGS 14
USE OF THE DEVICE 16
Installation *16*
Patient preparation *17*
Ultrasound treatment *18*
Programs features and main applications *20*

DEVICE CARE **26**
MAINTENANCE 26
TROUBLESHOOTING 27
DISPOSAL 28
WARRANTY 29
Support *30*
Spare part *30*
ELECTROMAGNETIC INTERFERENCES AND ELECTROMAGNETIC COMPATIBILITY TABLES 30

Information on the user manual

This manual is addressed to:

- machine user;
- owner;
- managers;
- handling personnel;
- installers;
- users;
- maintenance personnel.

It contains general information on the operation, precautionary practices, and maintenance information of the device I-TECH UT1.
This is an essential reference guide for users. It is essential to read the manual carefully before installing and using the device and to keep it at hand for quick reference.
Partial or complete non-observance of the recommendations may lead to malfunction and damage of the device, and therefore the warranty will no longer be valid.
Following the provisions and the recommendations supplied by the manufacturer scrupulously is the only way of achieving the best results and to benefit from a quick and efficient technical assistance if needed.
The limits of this manual:

- the user manual cannot replace actual user experience;
- for particularly demanding operations, this instruction manual only represents a remainder of the main operations.

This user manual must be considered an integral part of the equipment and must be preserved for future reference until the device is dismantled. The instruction manual must be available for reference at the place of use of the device and preserved carefully.
The manufacturer declines all responsibility for:

- improper use of the machine;
- use contrary to specific national laws;
- incorrect installation;
- defective power supply;
- improper maintenance;
- unauthorized modifications and interventions;
- use of material or spare parts that are not specific for the model;

- partial or complete non-observance of the instructions supplied;
- exceptional events.

To get further information, consult the manufacturer.

Manufacturer

I.A.C.E.R. S.r.l.

Via S. Pertini, 24/a • 30030 Martellago (VE)

Tel. 041.5401356 • Fax 041.5402684

IACER Srl. is an Italian manufacturer of medical devices (certified CE no. 0068/QCO-DM/235-2020 from the Notified Body n° 0068 MTIC InterCert S.r.l.).

Declaration of conformity

I.A.C.E.R. S.r.l

Via S.Pertini 24/A – 30030 Martellago (Ve), Italia

herewith declares under its own responsibility, that the product

I-TECH UT1

UMDNS Code**: 11248**

has been designed and manufactured according to the European Medical Device Directive 93/4/EEC (transposed in Italy by the D.Lgs. 46/97), as modified by the Directive 2007/47/EC (D.Lgs.37/2010) and further modifications/integrations.

The product has been assigned to class IIa, according to Annex IX, rule 9 of the Directive 93/42/EEC (and further modifications/integrations) and bears the mark

CE 0068

Compliance of the concerned product with the Directive 93/42/EEC has been assessed and certified by the Notified Body:

0068 – MTIC InterCert S.r.l.

Via G. Leopardi 14, Milano (MI) 20123, Italia

Certified number: 0068/QCO-DM/235-2020

following the certification procedure according to Annex II (excluding point 4) of the Directive 93/42/EEC.

Martellago, 03/08/2020 — MASSIMO MARCON

Place, date — *Legal Representative*

Classification

The I-TECH UT1 has the following classification:

- class IIa equipment (Directive 93/42/CEE, Annex IX, rule 9 and following modifications/additions);
- class I applied part type BF (classif. EN 60601-1);
- IPX0 equipment not protected against liquid and dust penetration. IPX7 only for ultrasound head;
- equipment and accessories not subject to sterilization;
- equipment unsuitable for use in presence of a flammable anesthetic mixture containing air, oxygen and nitrous oxide;
- continuous operating mode equipment;
- equipment not suited to be used in external.

Purpose and scope

Clinical intended use:	Therapeutic and aesthetic
Environmental intended use:	Ambulatory

I-TECH UT1 is a medical device for ultrasound therapy allows an ideal treatment of the muscular and nervous pathologies and for the rehabilitation post-trauma, both in case of chronic and acute pathologies.
Ultrasound treatment is indicated for several chronic and sub-chronic treatments as:

- Muscle pains and contractures
- Contractures
- Capsulitis
- Bursitis
- Myositis
- Soft tissues diseases
- Tendinitis
- Tendinosis

In fact, the ultrasound therapy is indicated for the antalgic pathologies and the relax of the tensed musculature, in the treatment of neuritis and sciatica, articular calcifications, tendinitis, hematomas and contractures.
This modality is recommended a lot in the esthetic field, in particular for the cellulite blemishes, tissue regeneration, vascularization and lymphatic drainage. For more details, the pathologies that can be treated, the specific application modalities and programs use, refer to the paragraph dedicated to the use of the device.

The device can be used both in clinics (on adult patients of both sexes, adults unless otherwise indicated by doctors), unless the operator is qualified to use such equipment and the conformity to the statements declared in the manual is respected.

Technical features

Characteristics	Specifications
Power supply	Input: 100-240V, 47-63Hz, 1.35A Output: 15V DC, 3A max Dimensions: 143x73x40mm
Classification (EN 60601-1)	Class I
Applied part (EN 60601-1)	Type BF
Dimensions (length x height x depth)	250x82x185mm
Output power (±20%)	0.5W-10.0W, when duty cycle ≥80% for 5cm² ultrasound head 0.5W-15.0W, when duty cycle ≤70% for 5cm² ultrasound head 0.1W-2.0W, when duty cycle ≥80% for 1cm² ultrasound head 0.1W-3.0W, when duty cycle ≤70% for 1cm² ultrasound head
Ultrasound wave frequency	1MHz ±10%, 3MHz ±10%
Duty cycle	10%-100%, stepping 10%
Working frequency	100Hz ±10%
Therapy time	Adjustable, max 30 minutes
Timer accuracy	±3%
Effective radiating area	1.0cm² ±20% (optional) 5.0cm² ±20%
Effective intensity	3.0W/cm² ±20%

Characteristics	Specifications	
Accuracy	±20% for each setting above 10% of the maximum value	
BNR (Max)	5.0	
Beam type	Collimated	
Material of ultrasound head	Aluminum	
IP Protection	IPX7 only for ultrasound head	
Environmental conditions for use	Temperature	10÷40°C
	Relative humidity	30÷85%
	Atmospheric pressure	800÷1060hPa
Environmental conditions for storage	Temperature	-10 ÷ +55°C
	Relative humidity	10÷90%
	Atmospheric pressure	700÷1060hPa

WARNING! The device has an output current over 10mA or 10V over a period of 5 seconds.

Useful life of the device and its accessories: 2 years.

Device and commands description

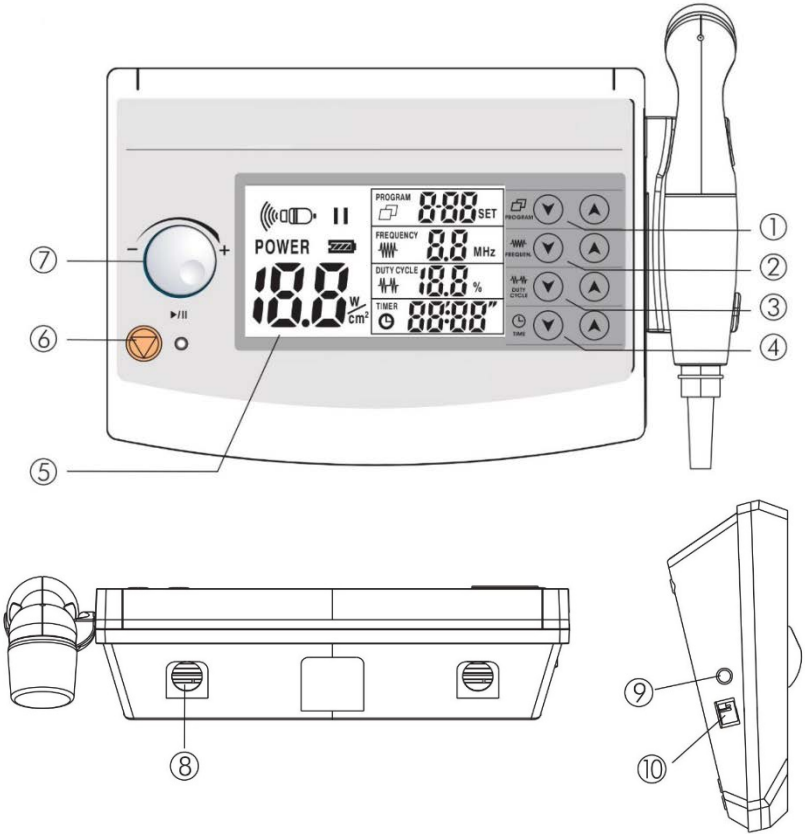

(1) Program selection button
(2) Frequency selection button 1/3MHz
(3) Duty cycle selection button
(4) Timer selection button
(5) LCD display
(6) STOP button
(7) Intensity selection knob and PAUSE
(8) Handle socket (5cm² and 1cm²)
(9) Power supply socket
(10) ON/OFF button

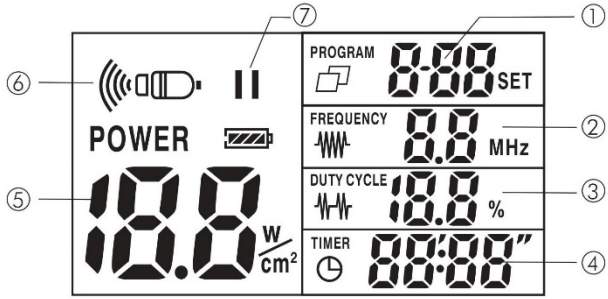

1. Program indicator
2. Frequency indicator 1/3MHz
3. Duty cycle indicator
4. Timer indicator
5. Output intensity/power indicator
6. Ultrasound head detector
7. PAUSE therapy indicator

⊙/○	ON /OFF button
⊖-⊙-⊕	Polarity of Power Supply
▽	Stop treatment
▶/❚❚	Start/Pause button (7)
(((•	Ultrasonic beam intensity (6)
▯▮	Ultrasound handle state (handle/skin contact) (6)
W/cm²	Ultrasound intensity (5)
W	Ultrasound power
◷	Therapy time (4)

Socket for the handle connection

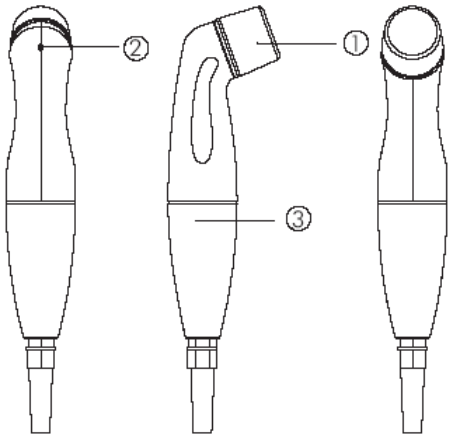

Ultrasound head
LED for ultrasound head detector
Handle applicator

Labelling

MODEL: UT1

Power supply: DC15V/3.0A, Adaptor

I.A.C.E.R.Srl,via S.Pertini 24/A
30030 Martellago(VE)-ITALY

ULTRASOUND

Waveform: Pulsed/Continuous
Acoustic Frequency:
1MHz±10%,
3MHz±10%
Modulation wave shape: 100Hz±10%
Duty factor: 10%~100%
R_{BN}(Max.): 5.0 Ie: 3.0W/cm^2±20%
Beam type: collimated

I-TECH MEDICAL DIVISION SN:000001 2013-05 CE 0068

1MHz, 3MHz
7.0cm^2
IPX7

A_{ER}: 5.0cm^2±20%
P: 15.0W±20%
R_{BN}(Max.): 5.0
Beam type: collimated
LOT
SN

Symbols	Description
I-TECH MEDICAL DIVISION	Manufacturer's logo
CE 0068	Product CE certification released by Notified Body n°0068
	Manufacturer
	Manufacturing date (YYYY-MM)
	Read instructions for use
	WEEE Directive for the disposal of electronic waste
	Applied part type BF
IPX7	Degree of protection of the head of the device from the entry of liquids and dusts
LOT	Ultrasound handle lot
SN	Serial number of ultrasound handle

Package content

The I-TECH UT1 package contains:

- n° 1 I-TECH UT1 device;
- n° 1 medical power supply;
- n°1 ultrasound head with 5cm² area;
- n° 1 power supply cable;
- n° 1 ultrasound gel;
- n° 1 transport bag;
- n° 1 user manual.

All the accessories are available as spare parts. It is also available under request the ultrasound handle of 1cm².

Contraindications

Do not use I-TECH UT1 if the source of the pain is unknown or not diagnosed. Use the device ONLY after having a diagnosis.

It is absolutely forbidden to use I-TECH UT1 in those areas affected by thrombophlebitis not to make the thrombus move. Avoid treating patients with deep vein thrombosis, embolism or arteriosclerosis or that have previously been treated with X rays or other radiations. This device should not be used near testicles or over neoplastic lesions, on the carcinogenic areas and over a healing fracture. Do not use ultrasounds on the stellate ganglion, on the spinal column after a laminectomy, on the area surrounding the main nerves or the cranium, over cardiac area and in anesthetized areas or in patients with bleeding problems. This device should not be used on ischemic tissues in individuals with vascular disease where the blood supply would be unable to follow the increase in metabolic demand and tissue necrosis might result. This device should not be used over the thoracic area if the patient is using a cardiac pacemaker in order to avoid interferences between the ultrasound device and the pacemaker.
Avoid using ultrasounds near bone growth centers in kids/growing children. Ultrasound therapy must not be performed near the uterus on pregnant women or those who suspect they might be pregnant. Therefore, the ultrasound beam should not be used in this area without ensuring that the patient is not pregnant.

Side effects

If the handpiece moves too slowly the patient may experience sharp and/or deep peripheral pain. If it moves too quickly, or if the handpiece is not held correctly, the therapeutic effects of the ultrasound might be reduced.
Some patients might be particularly sensitive to ultrasound and might therefore experience undesired reactions such as hot flushes in the treated area. Check the treated area before, during and after the treatment and suspend it in case of undesired effects.
Make sure that the handpiece is in contact with the skin using a specific ultrasound gel. Any substance used for this purpose must be highly conductive. Air is a terrible conductor of ultrasound waves.
With ultrasound therapy inflammation temporary increases can happen in treatment area, and so pain temporary increase, traumas due to more dosage,

nervous system reactions, sanguine coagulation. If this occurs, suspend the treatment and consult a doctor.

Warnings

It is recommended:

- to control position and meaning of all the labels and symbols on the equipment;
- the device doesn't produce or receive electromagnetic interferences from other devices. However, it's recommended to keep a distance of at least 3 meters from televisions, monitor, mobile phones or other electronic devices (which can lead to abnormal device behavior). Care must be taken when operating this equipment around other equipment. Potential electromagnetic or other interference could occur to this or to the other equipment;
- to avoid the use of the device by persons who did not read carefully this manual;
- not to wear metal objects during treatment (both for the operator and both for the patient);
- to use ONLY accessories supplied by device manufacturer. **It is recommended to use the device only with the supplied power supply MPU50-160**. I-TECH UT1 is tested and guaranteed for use with the supplied accessories.

It is forbidden:

- to use the device in the presence of MRI equipment and patient monitoring equipment, of electrosurgical (possible bruises and burns) or shortwave or microwave therapy equipment or other equipment that sends electrical impulses into the body and in general in combination to other medical devices;
- to use the device by persons known to be unsound-minded, or suffering from sensibility disorders, permanently or temporarily disabled unless assisted by qualified personnel (e.g. a doctor or therapist); by persons younger than 12 years old or not adequately educated about the device use by an adult person;
- ultrasounds should not be used on areas with reduced sensitivity or circulation. Patients experiencing reduced sensitivity may not be able to warn their therapist/doctor when the ultrasound is too intense. Patients experiencing circulation problems may suffer from an excessive increase of temperature in the treated area;
- to use the device in presence of signs of deterioration of the device itself, cables and/or accessories: please contact the dealer or the manufacturer

following the instructions given in the paragraph *Support.* Control carefully the integrity of the device before each use;

- to use the device close to flammable substances/gas/explosives, in environments with high concentrations of oxygen, with aerosol-therapy devices or in wet environments (use of the device is prohibited in bathroom or shower areas or while showering/bathing);
- absolutely use a device that has been wet or has come into contact with liquids before it has been checked by the manufacturer and / or service center. Take care to prevent liquids from entering the ventilation slots;
- to use the device while driving or during the operation and control of equipment/machinery;
- the use of the device in hyposensitive areas, on the carotid sinuses (carotid), genitals, near the uterus and abdomen, in the area of the body in which glands are present, on cancerous lesions. Do not direct the beam towards or near the eyes;
- ***maintain the ultrasound head stationary on one point during the therapy.*** We advise moving the head if the intensity is more than 0,5W/cm²;
- to use pointed or sharp objects on the ultrasound head and the control panel of the device.

Warning:

- before administering any treatment to a patient, you should become acquainted with the operating procedures for each mode of treatment available, as well as the indications, contraindications, warnings and precautions. Consult other resources for additional information regarding the application of Ultrasound;
- ultrasound should be routinely checked before each use to determine that all controls function normally, especially that the intensity control does properly adjust the intensity of the ultrasonic power output in stable manner. Also, determine that the treatment time control does actually terminate ultrasonic power output when the timer reaches zero;
- handle the handpiece with care to preserve its characteristics;
- the tendency to bleed is increased by the heat as more blood flows in the area. Be careful when treating patients with bleeding disorders;
- avoid heating or overheating the capsule in cases of acute and subacute arthritis.;
- pay attention to use connection cables with children/young people: strangulation danger;
- do not mix connection cables up with earphones or other devices and do not connect the cable to other equipment;

- the device is not intended for outdoor use;
- the device is not intended for use in home environments.

The manufacturer considers himself responsible for the performances, reliability, safety and security of the device only if:

- any addition, modification and/or repair are carried out by authorized personnel;
- the environmental electrical installation to which I-TECH UT1 is connected is compliant to the national laws;
- the instructions for use contained in this manual are strictly followed.

Should any foreign materials penetrate the device contact the retailer or manufacturer immediately. If dropped down, check that the housing is not cracked or damaged in any way; if so, contact the retailer or manufacturer.
Should you notice any changes in the device's performance during treatment, interrupt the treatment immediately and consult the retailer or manufacturer.
In case of undesired effects, suspend the therapy, stop using the device straight away and contact your doctor.

The ultrasound therapy handle is not designed to prevent the ingress of water or liquids. Ingress of water of liquids could cause malfunction of internal components of system and therefore create risk of injury to the patient/user.

If the patient feels a deep and sharp pain during the treatment, the intensity must be reduced to a comfortable level

Consult a doctor before using I-TECH UT1 with metallic osteosynthesis devices.

IF YOU HAVE ANY DOUBTS REGARDING THE DEVICE USE CONSULT YOUR DOCTOR.

Use of the device

Installation

Remove the device and ala accessories from shipping cartons. Check the device equipment.
Before the installation and the connection of the device to the mains supply, check that the voltage and the frequency correspond with the available mains supply and with the information in this user manual.
Follow the instructions below for a correct installation:

- connect the power supply cable to the power supply;
- connect the power supply to the device connector;
- connect the power supply plug to the wall socket.

Press on **ON/OFF** button to switch on the device.

If it is connected correctly, display will show the picture below:

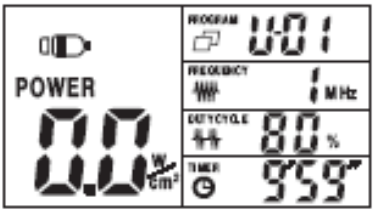

If it is connected in wrong way, display will show the picture below:

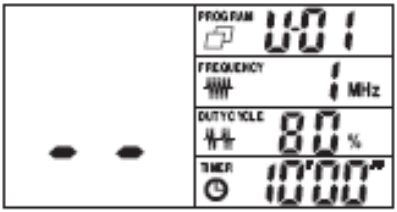

Patient preparation

Immediately after switching on, the device carries out a self-test. At the end of the self-test a beep is heard and display shows the picture as described in previous paragraph. When an error is found an error code will appear on the display: please read the paragraph *Troubleshooting* to get more details.

Before starting the ultrasound treatment, please, check the following indications:

- make sure that the patient is in a comfortable position. The treatment area should be completely exposed and relaxed.
- Inform the patient about the objective of the treatment and the sensation he/she should feel during therapy.
- Make sure that there are no contraindications to therapy.
- Inspect accurately the treatment area for abrasion, irritation, surface veins, etc.
- Clean the treatment area with a soap or alcohol at 70%. In case of excessive hairy skin, it is suggested to shave the zone to get optimal treatment.

During treatment:

1. The ultrasound head has to be moved constantly when intensity is higher than 0.5W/cm².
2. Ask about his/her sensation during treatment. If necessary, adjust ultrasound intensity, by reducing it if the treatment is not comfortable.

3. In case of indications of wrong contact, it is recommended to add the contact gel or reposition the ultrasound-head.
4. During the treatment if the ultrasound head works correctly, the applicator LED will light; if there is no contact, the applicator LED will blink light. When the treatment is in PAUSE, the applicator LED will be turned off and the countdown will also be stopped.

WARNING:

→ The treatment should be performer with a regular movement of the ultrasound head, not too slow to avoid inducing heat, not too fast to prevent a bad contact which would reduce the effectiveness of the treatment.

→ If it is needed to replace the handle, turn the power switch off and disconnect the device from power supply.

After the treatment clean the skin of the treated area as well as the ultrasound head by using a dry towel. The ultrasound-head should be cleaned up with a 70% alcohol solution. Check the patient conditions and the treated area (pain, circulation, etc.).

The patient should reveal any complaint/reaction before starting the treatment after.

Ultrasound treatment

After performing the preliminary operations listed in the previous paragraph, start the session making sure to follow these steps:

1. Press **PROGRAM** keys PROGRAM to select the program: scroll up/down the programs with the arrows.
2. Select the frequency 1 or 3 MHz by pressing the button **FREQUEN.** FREQUENCY .
3. Select duty cycle (10-100%) by pressing the buttons **DUTY CYCLE** DUTY CYCLE (up arrow and down arrow).
4. Select therapy time (1-30 minutes) by pressing the buttons **TIME** (up arrow and down arrow) TIMER .

5. Put a good quantity of conductive gel on the area to be treated. It is recommended to use a CE conductive gel.
6. Regulate the intensity of the treatment using the knob (7). Press any of the **PROGRAM, FREQUEN., DUTY CYCLE** or **TIME** buttons during the treatment to visualize W (Watts) or W/cm² (Watt/sq cm).
7. Keep the head in constant contact with the skin and make sure that the part is covered in gel so that the therapy is effective. The green LED located next to the head on the handpiece lights up when the device is working.
8. The device has a head/skin coupling system for safety reasons. If the contact is not correct and if the intensity is set above 0,5W, the LED on the handpiece and the symbol on the display will start flashing. The system is not available on the 1cm head because of the reduced contact area: the device emits an ultrasound beam even if the head is not in contact with the skin. This is not a defect but rather a technical choice, as it would be impossible to perform therapies on small and irregular areas like toes or fingers with such a system.
9. It's possible to stop temporary the therapy at any time pressing the knob (3). Press again the knob to continue the treatment.
10. Press the orange button to stop immediately the treatment in progress

In order to ensure efficient transfer of energy, a contact means is required between the ultrasound head and the body. Air causes virtually total reflection of the ultrasound energy. The best means for the transfer of ultrasound energy is the ultrasound gel. Put a quantity of conductive gel on the area to be treated. Move the ultrasound head during therapy session in a circular motion. The treated area should be twice the ultrasound head area.

If the body surface is very irregular, making it difficult to obtain good contact between the ultrasound head and the body (e.g. ankle or foot), or if direct contact must be avoided (e.g. due to pain), the affected area may be treated under water (subaqual method). Use two liters of water, with a temperature not higher than 25 ° C. The water should be degassed (by previous boiling) in order to prevent air bubbles that could decrease the effectiveness of the treatment.

WARNING. Never apply the gel to the ultrasound head. The treatment head will register this as contact and may emit ultrasound energy, which could damage the ultrasound head. Always use the gel certificated with the requirements of the medical, such as with CE mark.

WARNING. The device can be used to perform immersion treatments. The handle and its cable are protected from damage by water infiltration according with the gradeIPX7.

Programs features and main applications

Refer to the following table for programs features. All parameters are adjustable by the user.

PROG.	Medical prg. YES/NO	FREQ.	DUTY CYCLE	TIME	SUGGESTED INTENSITY
U-01	Yes	1MHz	80%	10min	1.0W/cm²
U-02	Yes	1MHz	50%	10min	1.0W/cm²
U-03	Yes	1MHz	50%	20min	1.5W/cm²
U-04	Yes	1MHz	50%	15min	1.0W/cm² 1.5W/cm² 2.0W/cm²
U-05	Yes	3MHz	80%	15min	1.0W/cm²
U-06	Yes	1MHz	30%	15min	1.5W/cm²
U-07	Yes	1MHz	80%	15min	1.0W/cm² 1.5W/cm²
U-08	Yes	1MHz	80%	8min	1.5W/cm²
U-09	Yes	1MHz	50%	12min	1.5W/cm²
U-10	Yes	3MHz	80%	10min	1.0W/cm²

TREATMENT	PRG	HANDLE POSITION	FREQ	DUTY CYCLE	TIME	HEAD	SUGGESTED INTENSITY	APPLICATIONS NUMBERS
Acne	U-01/10	Affected area	3MHz	30%	15min	5cm²	1.5W/cm²	Free
Muscle fatigue	U-01/10	Affected area	1MHz	70%	20min	5cm²	2W/cm²	2-3
Algodystrophy	U-01/10	Affected area	1MHz	50%	10min	5cm²	1.0W/cm² - 1.5W/cm²	10-15
Anti-inflammatory	U-01/10	Affected area	1MHz	50%	15min	5cm²	1.0W/cm² - 1.5W/cm²	10-15
Arthritis	U-01/10	Affected area	1MHz	50%	15min	5cm²	1.0W/cm² - 1.5W/cm²	10-15
Fingers arthritis	U-01/10	Hand fingers	1MHz	40%	15min	1cm²	1.5W/cm² - 2W/cm²	10-15
Arthrosis	U-01/10	Affected area	1MHz	50%	15min	5cm²	1.5W/cm² - 2W/cm²	10-15
Bursitis	U-01/10	Affected area	1MHz	30%	15min	5cm²	2W/cm²	10-15
Brachialgia	U-01/10	Trapezium and arm	1MHz	30%	15min	5cm²	2W/cm²	10-15
Capsulitis	U-01/10	Shoulder	1MHz	30%	15min	5cm²	2W/cm²	10-15
Cavitations	U-01/10	Affected area	1MHz	70%	20min	5cm²	2W/cm² - 3W/cm²	20-30
T-T headache	U-01/10	Cervical area	1MHz	50%	15min	5cm²	1.0W/cm² - 1.5W/cm²	10-15
T-T headache	U-01/10	Massetere	1MHz	50%	15min	5cm²	1.5W/cm²	10-15
Cervicalgias	U-01/10	Cervical area	1MHz	50%	15min	5cm²	1.0W/cm² - 1.5W/cm²	10-15
Whiplash	U-01/10	Cervical and dorsal + front zone	1MHz	50%	15min	5cm²	1.0W/cm² - 1.5W/cm²	10-15

TREATMENT	PRG	HANDLE POSITION	FREQ	DUTY CYCLE	TIME	HEAD	SUGGESTED INTENSITY	APPLICATIONS NUMBERS
Condropathy	U-01/10	Affected area	1MHz	60%	15min	5cm²	1.0W/cm² - 1.5W/cm²	10-15
Muscle contractures	U-01/10	Affected area	1MHz	70%	20min	5cm²	2W/cm²	4-6
Coxarthrosis	U-01/10	Hip	1MHz	60%	15min	5cm²	2W/cm²	10-15
Cramps	U-01/10	Affected area	1MHz	70%	20min	5cm²	2W/cm²	4-6
Cruralgy	U-01/10	Internal thigh	1MHz	40%	15min	5cm²	2W/cm²	10-15
Discopathy	U-01/10	Affected area	1MHz	50%	15min	5cm²	1.0W/cm² - 1.5W/cm²	10-15
Strains	U-01/10	Affected area	1MHz	50%	15min	5cm²	1.0W/cm² - 1.5W/cm²	10-15
Articular pain	U-01/10	Affected area	1MHz	50%	15min	5cm²	1.0W/cm² - 1.5W/cm²	10-15
Intercostal pain	U-01/10	Affected area	1MHz	50%	15min	5cm²	1.0W/cm² - 1.5W/cm²	10-15
Menstrual pain	U-01/10	Abdomen	1MHz	50%	15min	5cm²	1.0W/cm² - 1.5W/cm²	10-15
Muscle pain	U-01/10	Affected area	1MHz	50%	15min	5cm²	1.0W/cm² - 1.5W/cm²	10-15
Rheumatic pain	U-01/10	Affected area	1MHz	50%	15min	5cm²	1.0W/cm² - 1.5W/cm²	10-15
Dorsalgy	U-01/10	Dorsal area	1MHz	50%	15min	5cm²	1.0W/cm² - 1.5W/cm²	10-15
Drainage	U-01/10	Affected area	1MHz	60%	15min	5cm²	2W/cm²	30
Eczemas	U-01/10	Affected area	3 MHz	50%	15min	5cm²	1.0W/cm² - 1.5W/cm²	10-15

TREATMENT	PRG	HANDLE POSITION	FREQ	DUTY CYCLE	TIME	HEAD	SUGGESTED INTENSITY	APPLICATIONS NUMBERS
Oedemas	U-01/10	Affected area	1MHz	30%	15min	5cm²	2W/cm²	10-15
Hematomas	U-01/10	Affected area	1MHz	40%	15min	5cm²	2W/cm² - 3W/cm²	10-15
Epicondylitis	U-01/10	Elbow	1MHz	40%	15min	5cm²	1.0W/cm² - 1.2W/cm²	10-15
Epitrocleitis	U-01/10	Internal elbow	1MHz	40%	15min	5cm²	1.0W/cm² - 1.2W/cm²	10-15
Slipped disc	U-01/10	Affected area	1MHz	50%	15min	5cm²	1.0W/cm² - 1.5W/cm²	10-15
Gonarthrosis	U-01/10	Knee	1MHz	50%	15min	5cm²	1.5W/cm² - 2W/cm²	10-15
Lymphoedema	U-01/10	Affected area	1MHz	30%	15min	5cm²	2W/cm²	10-15
Lypolisis	U-01/10	Affected area	1MHz	60%	15min	5cm²	2W/cm²	30
Lumbago	U-01/10	Lumbar area	1MHz	50%	15min	5cm²	1.0W/cm² - 1.5W/cm²	10-15
Massage	U-01/10	Affected area	1MHz	70%	20min	5cm²	2W/cm²	Free
Mialgy	U-01/10	Affected area	1MHz	50%	15min	5cm²	1.0W/cm² - 1.5W/cm²	10-15
Mononeuropathy	U-01/10	Pain zone	1MHz	50%	15min	5cm²	1.5W/cm²	12-15
Neuralgia	U-01/10	Affected area	1MHz	50%	15min	5cm²	1.0W/cm² - 1.5W/cm²	10-15
Periarthritis	U-01/10	Shoulder	1MHz	70%	15min	5cm²	1.0W/cm² - 1.5W/cm²	10-15
Pubalgy	U-01/10	Internal thigh (upper zone)	1MHz	50%	15min	5cm²	1.0W/cm² - 1.5W/cm²	10-15

TREATMENT	PRG	HANDLE POSITION	FREQ	DUTY CYCLE	TIME	HEAD	SUGGESTED INTENSITY	APPLICATIONS NUMBERS
Radiculitis	U-01/10	Affected area	1MHz	50%	15min	5cm²	1.0W/cm² - 1.5W/cm²	10-15
Muscle recovery	U-01/10	Affected area	1MHz	70%	20min	5cm²	2W/cm²	Free
Rizarthrosis	U-01/10	Thumb area	1MHz	30%	15min	5cm²	1.5W/cm²	10-15
Rizopathy	U-01/10	Dorsal area	1MHz	60%	15min	5cm²	1.5W/cm²	10-15
Wrinkle	U-01/10	Affected area	3MHz	30%	15min	5cm²	1.5W/cm²	Libero
Sciatalgy	U-01/10	Affected area	1MHz	50%	15min	5cm²	1.0W/cm² - 1.5W/cm²	10-15
Stretch marks	U-01/10	Affected area	3MHz	40%	15min	5cm²	2W/cm²	Free
Venous stasis	U-01/10	Extremities limbs	1MHz	50%	15min	5cm²	2W/cm²	Free
Sprains	U-01/10	Affected area	1MHz	40%	15min	5cm²	2W/cm²	4-6
Muscle sprains	U-01/10	Affected area	1MHz	40%	15min	5cm²	2W/cm²	8-10
Tallonitis	U-01/10	Heel	1MHz	50%	15min	5cm²	1.0W/cm² - 1.5W/cm²	10-15
Tendinitis	U-01/10	Affected tendons	1MHz	50%	15min	5cm²	1.0W/cm² - 1.5W/cm²	10-15
Stiff neck	U-01/10	Cervical area	1MHz	50%	15min	5cm²	1.0W/cm² - 1.5W/cm²	10-15
Carpal tunnel syndrome	U-01/10	Internal wrist	1MHz	40%	15min	5cm²	1.0W/cm² - 1.5W/cm²	10-15
Vascularisation	U-01/10	Affected area	1MHz	60%	15min	5cm²	1.0W/cm² - 1.5W/cm²	Free
Active principle vehiculation	U-01/10	Affected area	1MHz	60%	15min	5cm²	2W/cm²	Free

Indications regarding intensity and number of sessions can vary depending on the opinion of your personal doctor or therapist.

In particular, the indications on intensity do not consider the width of the area to be treated. If this is very wide, the intensity of the ultrasound can be increased by 20% with respect to what indicated above or, vice versa, it can be reduced, if the area is small. Similarly, the movement on the area must be appropriate to the heat felt by the patient: the slower it's been moved, the stronger the heat. If the patient complains about the heat, we advise reducing the intensity or moving the head faster.

REMEMBER TO:

- keep moving the ultrasound head and uniformly apply the treatment on the overall area;
- use enough gel in order to guarantee a proper contact.

Maintenance

If used following the instructions given in this user guide, the equipment does not require any particular kind of maintenance.
It is recommended that the manufacturer carries out a functional test every 24 months. The manufacturer does not consider the I-TECH UT1 device repairable by any personnel outside the company. Each operation of the kind perpetuated by personnel not authorized by the manufacturer will be considered as tampering the device, freeing the manufacturer from granting warranty and from any danger that the user or the operator may be exposed to.

CLEANLINESS

Switch off I-TECH UT1 after each therapy session, as well as remove the cable by the specific connector.
Clean the device from dust using a dry soft cloth. Resistant strains can be removed using a sponge soaked in solution of water well squeezed. **ATTENTION! No alcohol content solution**. If a more sterile cleaning is needed, use a cloth moistened with an antimicrobial cleaner.
Device not subject to sterilization.
Note:

- Never use solvents for cleaning. Cleaning agents cause damage to the device.
- Attention to the need for periodic maintenance, especially:
  - inspection of main body for cracks, which may allow the ingress of conductive fluid;
  - inspection of the main cable.

Clean the ultrasound head to remove gel AFTER EACH USE using a soft cloth or paper cloth, lightly wet if needed. Aggressive clearing agents could damage the rubber insulation and shorten the life of the cables.
After cleaning the external box, dry all of the parts carefully before turning on the device.
Do not disassemble the device to clean or check it: there is no need to clean the inside of the machine and in any case this operation should be performed by skilled technical personnel authorised by I.A.C.E.R. Srl.

TRANSPORTATION AND STORAGE

Precaution for the transportation

There is no particular precaution to be taken during transportation of the device, since I-TECH UT1 is a portable device. In any case it is recommended to store I-TECH UT1 and its accessories in the supplied carrying bag after each treatment. Protect the device from high temperature, direct daylight and liquids. Keep the device in a fresh and well-ventilated environment. Place the device together with all its accessories in a dry place away from dust, direct sunlight and protected from the weather, chemical products and vibrations. Do not place other objects on top of the device.

Precaution for the storage

The appliance is protected up to the following environmental conditions:

In operation

temperature	10÷40°C
relative humidity	30÷85%
pressure	800÷1060hPa

Inside the supplied carrying bag

temperature	–10 ÷ +55°C
relative humidity	10÷90%
pressure	700÷1060hPa

Troubleshooting

I-TECH UT1 was designed and manufactured using advanced technological solutions and high-quality components for an efficient and reliable use.

Any type of work on I-TECH UT1 must be carried out exclusively by the manufacturer or by an authorized dealer. In any event, any presumed malfunction of I-TECH UT1 must be verified before sending the device to the manufacturer.

Check the following:

PROBLEM	POSSIBLE CAUSE	SOLUTION
Display does not switch on	Wrong/failed connection with power supply.	Check if the mains adapter is connected to the device and to power supply.
		Check the integrity of all plugs/sockets and connection cables.

PROBLEM	POSSIBLE CAUSE	SOLUTION
Display shows the following error	Error during the self-test	Remove any applicators, switch the apparatus off and on again. If the problem persists, contact the fabricant.
Display shows the following picture 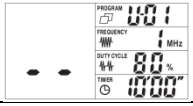	No handle is connected	Check the connection of applicator/s to the socket/s. If the problem persists, contact the fabricant.
Some commands don't work regularly.	Defective keys and buttons.	Contact the manufacturer
	Failure electronic control circuit.	
The device works properly, but there is a noticeable drop in the effectiveness of the treatment.	Possible head failure.	Contact the manufacturer
	Possible failure of the device current generator circuit.	

Disposal

The I-TECH UT1, device was designed and engineered to have minimal negative environmental impact, in consideration of its performance and safety requirements, following the disposition given by the European Directive 2012/19/EU, regarding the waste of electrical and electronic equipment.
Rigorous standards were followed in order to minimize the amount of waste, use of toxic materials, noise, non-required radiation and energy consumption.
A deep research on the optimization of machine performances guarantees a significant consumption's reduction, in accordance to the saving energy principles.

This symbol means that the product shall not be disposed as domestic waste.

The correct disposal of obsolete equipment, accessories and most of all of batteries contributes in preventing possible negative consequences on human and environmental health.
The user must dispose of scrap equipment by taking it to a recognized center for recycling of electrical and electronic equipment.

For further information on the obsolete equipment disposal please contact the dedicated disposal service or the shop in which the device was bought.

Warranty

IACER Srl guarantees a warranty period from the purchasing date for I-TECH UT1 device, unless information contained in this manual regarding installation, use and maintenance is strictly adhered. The wearing parts are not included in the warranty, unless of visible manufacturing defects. The warranty is void in case of tampering of the device and in case of intervention on the same by personnel not authorized by the manufacturer or by the authorized dealer.
As established by the Medical Device Directive 93/42/EEC, the manufacturer is obliged to trace at any time the equipment supplied to intervene promptly, if necessary, as a result of manufacturing defects.
The warranty conditions are those described in the following paragraph Warranty conditions*. The warranty is provided by IACER.*
WARNING! In the event of non-shipment, the manufacturer declines all responsibility, if corrective action on the equipment is necessary.
Should you need to return the goods then please pack the device and all the accessories so that it won't be damaged during transportation. In order to be entitled to the warranty assistance, the purchaser must enclose to the device a copy of the purchasing receipt, proving origin and purchasing date.
For more information on the warranty please contact the distributor or vendor, in order to check the norm and standard in force in your Country, or ultimately the manufacturer IACER Srl.

Warranty conditions

1) Should assistance be needed, enclose the purchasing receipt when sending the device to the manufacturer.
2) The warranty period is valid only on the electronic parts. The warranty will be granted by the shop or directly by the manufacturer.
3) The warranty covers only the product damages, which causes its malfunctioning.
4) Warranty means that only the manufacturing defect components or material are covered by reparation or free substitution, hand work included.
5) Warranty is not applied to damages caused by negligence or use not compliant to the given instructions, by intervention on the device from personnel not authorized, accidental causes or negligence form the purchaser.
6) Warranty is not applied in case of damages caused by unsuitable power supplies.

7) Warranty does not apply to wearing parts.
8) Warranty does not include transportation costs which have to be covered by the purchaser.
9) After the warranty period the warranty is no more applicable. In this case all the assistance interventions will be performed by debiting the costs of the substitution of the parts, the hand work and the transportations costs.
10) The court of Venice has exclusive jurisdiction over any dispute.

Support

The manufacturer is the one and only allowed to operate with technical assistance. For any technical assistance contact:

I.A.C.E.R. S.r.l.
Via S. Pertini, 24/a • 30030 Martellago (VE)
Tel. 041.5401356 • Fax 041.5402684

Technical documentation related to repairable parts could be attached, but only with previous authorization from the manufacturer and only after giving proper training to the staff employed in technical assistance.

Spare part

The manufacturer makes available at any time the original spare parts for the equipment. Please contact:

I.A.C.E.R. S.r.l.
Via S. Pertini, 24/a • 30030 Martellago (VE)
Tel. 041.5401356 • Fax 041.5402684

In order to preserve the warranty, the functionality and the security and safety of the product, it is highly recommended to use exclusively the spare parts given by the manufacturer.

Electromagnetic interferences and electromagnetic compatibility tables

The I-TECH UT1 equipment has been designed and manufactured according to the TECHNICAL STANDARD on ELECTROMAGNETIC COMPATIBILITY legislation EN 60601-1-2:2015 with the aim of providing adequate protection from harmful interference when installed in homes and health establishments.
According to operating principles the device does not generate significant radio frequency energy and is adequately immune to radiated electromagnetic

fields: under such conditions it does not detrimentally harmful interfere with radio-electric communications, electro-medical equipment for monitoring, diagnosis, therapy and surgery, office electronic devices such as computers, printers, photocopiers, fax machines, etc. or any electric or electronic equipment used in these environments, as long as the equipment complies with the ELECTROMAGNETIC COMPATIBILITY directive.
In any case, in order to avoid any interference problems, it is recommended to use the therapy equipment enough far away from critical equipment for monitoring vital patient functions, and to be careful when applying therapy to patients with pacemakers. In any case it is recommended to use the equipment at least at 3 meters away from televisions, monitors, cellphones or any other electronic equipment.

For more details, please see the EMC tables at the end of this manual.

ELECTROMAGNETIC COMPATIBILITY TABLES

Guidance and manufacturer's declaration – ELECTROMAGNETIC EMISSIONS – FOR ALL EQUIPMENT AND SYSTEMS		
The I-TECH UT1 device is intended for use in the electromagnetic environment specified below. The customer or the user of the I-TECH UT1 should assures that it is used in such an environment.		
Emission test	**Compliance**	**Electromagnetic environment - Guidance**
RF emissions CISPR 11	Group 1	The I-TECH UT1 device uses RF energy only for its internal function. Therefore, its RF emissions are very low and are not likely to cause any interference in nearby electronic equipment.
RF emissions CISPR 11	Class B	The I-TECH UT1 device is suitable for use in all establishments other than domestic and those directly connected to the public low-voltage power supply network that supplies buildings used for domestic purposes.
Harmonic emissions IEC 61000-3-2	Class A	
Voltage fluctuations / flicker emissions IEC 61000-3-3	Compliant	

Guidance and manufacturer's declaration – ELECTROMAGNETIC IMMUNITY – FOR ALL EQUIPMENT AND SYSTEMS			
The I-TECH UT1 is intended for use in the electromagnetic environment specified below. The customer or the user of the device should assure that it is used in such an environment			
Immunity test	**Test level IEC 60601**	**Compliance level**	**Electromagnetic environment - guide**
Electrostatic discharge (ESD) IEC 61000-4-2	±8kV in contact ±15kV on air	±8kV in contact ±15kV on air	Floors should be wood, concrete or ceramic tile. If floors are covered with synthetic material, the relative humidity should be at least 30%.
Electrical fast transient/burst IEC 61000-4-4	±2kV for power supplies lines	±2kV for power supplies lines	Mains power quality should be that of a typical commercial or hospital environment.
	±1kV for input/output lines	±1kV for input/output lines	

Guidance and manufacturer's declaration – ELECTROMAGNETIC IMMUNITY – FOR ALL EQUIPMENT AND SYSTEMS			
The I-TECH UT1 is intended for use in the electromagnetic environment specified below. The customer or the user of the device should assure that it is used in such an environment			
Immunity test	**Test level IEC 60601**	**Compliance level**	**Electromagnetic environment - guide**
overvoltage IEC 61000-4-5	±1kV linea(e) – linee / line(s) to line	±1kV linea(e) – linee / line(s) to line	Mains power quality should be that of a typical commercial or hospital environment.
	±2kV line(s) to earth	±2kV line(s) to earth	
Voltage dips, short interruptions and voltage variations on power supplì input lines IEC 61000-4-11	<5% U_T (>95% dip in U_T) for 0,5 cycles 40% U_T (60% dip in U_T) for 5 cycles 70% U_T (30% dip in U_T) for 25 cycles <5% U_T (>95% dip in U_T) for 5s	<5% U_T (>95% dip in U_T) for 0,5 cycles 40% U_T (60% dip in U_T) for 5 cycles 70% U_T (30% dip in U_T) for 25 cycles <5% U_T (>95% dip in U_T) for 5s	UT1 con un gruppo di continuità (UPS) o con batterie. Main power quality should be that of a typical commercial or hospital environment. If the user of I-TECH UT1 requires continued operation during power mains interruptions, it is recommended that I-TECH UT1 be powered from an uninterruptible power supply (UPS) or a battery.
Power frequency (50/60 Hz) magnetic field IEC 61000-4-8	30A/m	30A/m	Power frequency magnetic fields should be at levels characteristic of a typical location in a typical commercial or hospital environment
Note: U_T is the A.C. mains voltage prior to application of the test level.			

Guidance and manufacturer's declaration – ELECTROMAGNETIC IMMUNITY – FOR EQUIPMENT AND SYSTEMS THAT ARE NOT LIFE-SUPPORTING			
The I-TECH UT1 device is intended for use in. the electromagnetic environment specified below. The customer or the user of the I-TECH UT1 should assure that it is used in such an environment.			
Immunity test	***Test level*** **IEC 60601**	***Compliance level***	***Electromagnetic environment – guidance***
Portable and mobile RF communications equipment should be used no closer to any part of the I-TECH UT1 device, including cables, than the recommended separation distance calculated from the equation applicable to the frequency of the transmitter.			
			Recommended separation distance
Conducted RF IEC 61000-4-6	$3V_{eff}$ *from 150kHz to 80MHz*	$3V_{eff}$ *from 150kHz to 80MHz*	$d = 1.2\sqrt{P}$ $from\ 150kHz\ to\ 80MHz$
Radiated RF IEC 61000-4-3	10V/m *from 80MHz to 2,7GHz*	10V/m [E_1] V/m	$d = 1.2\sqrt{P}$ $from\ 80MHz\ to\ 800MHz$ $d = 2.3\sqrt{P}$ $from\ 800MHz\ to\ 2{,}7GHz$
Si può verificare interferenza in prossimità di apparecchi contrassegnati dal seguente simbolo: *Where P is the maximum output power rating of the transmitter in watts (W) according to the transmitter manufacturer and d is the recommended separation distance in metres (m).* *Field strengths from fixed RF transmitters, as determined by an electromagnetic site survey[a], should be less than the compliance level in each frequency range[b].* *Interference may occur in the vicinity of equipment marked with the symbol above.*			
Note: (1) *At 80 MHz and 800 MHz, the higher frequency range applies.* (2) *Electromagnetic propagation is affected by absorption and reflection from structures, objects and people.*			
a) *Field strengths from fixed RF transmitters, such as base stations for radio (cellular/cordless) telephones and land mobile radios, amateur radio, AM and FM radio broadcast and TV broadcast cannot be predicted theoretically with accuracy. To assess the electromagnetic environment due to fixed RF transmitters, an electromagnetic site survey should be considered. If the measured field strength in the location in which I-TECH UT1 is used exceeds the applicable RF compliance level above, I-TECH UT1 should be observed to verify normal operation. If abnormal performance is observed, additional measures may be necessary, such as re-orienting or relocating I-TECH UT1.* b) *Over the frequency range 150kHz to 80MHz, field strengths should be less than* [V_1] V/m.			

Recommended separation distances between portable and mobile radio equipment for I-TECH U1 not sustaining vital functions			
I-TECH UT1 is intended for use in an electromagnetic environment in which radiated RF disturbances are controlled. The customer or the user of I-TECH UT1 can help prevent electromagnetic interference by maintaining a minimum distance between portable and mobile RF communications equipment (transmitters) and I-TECH UT1 as recommended below, according to the maximum output power of the communications equipment.			
Rated maximum output power of transmitter (W)	***Separation distance according to the frequency of the transmitter (m)***		
	$from\ 150kHz$ $to\ 800\ MHz$	$from\ 80MHz$ $to\ 800\ MHz$	$from\ 800MHz$ $to\ 2{,}7GHz$
0.01	0.12	0.12	0.23
0.1	0.37	0.37	0.74
1	1.17	1.17	2.33
10	3.69	3.69	7.38
100	11.67	11.67	23.33
For transmitters rated at a maximum output power not listed above, the recommended separation distance d in metres (m) can be determined using the equation applicable to the frequency of the transmitter, where P is the maximum output power rating of the transmitter in watts (W) according to the transmitter manufacturer.			
Note (1) *At 80MHz and 800MHz, the separation distance for the higher frequency range applies.* (2) *These guidelines may not apply in all situations. Electromagnetic propagation is affected by absorption and reflection from structures, objects and people.*			

I-TECH UT1. All rights reserved I-TECH UT1 and the logo I-TECH MEDICAL DIVISION are property exclusively of I.A.C.E.R. Srl and registered.

Edition: MNPG116-02 of the August 10th, 2020

I-TECH
MEDICAL DIVISION

I.A.C.E.R. Srl

Via S. Pertini 24/A - 30030 Martellago (VE) - Italia / Italy
Tel.: (+39) 041/5401356 - Fax: (+39) 041/5402684
Email: iacer@iacer.it - PEC: iacer@pec.it - Web: www.itechmedicaldivision.com

Cod. Fisc. / P.IVA / Vat Number: IT00185480274 - R.E.A.: VE N. 120250 - M. VE001767 -
Capitale Sociale / Share Capital: € 110.000,00 i.v.